DEMS 350

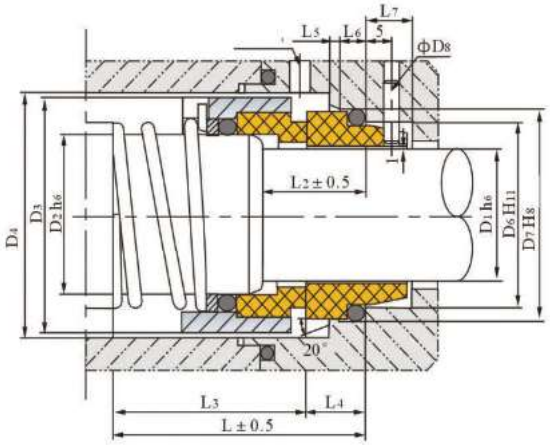

Çalışma Limitleri

Basınç: ≤1MPa
Hız: ≤13m/s
Sıcaklık: -20˚C~+150˚C

Operating Limits

Pressure: ≤1.0MPa
Speed: ≤10m/s
Temperature: -20˚C~+180˚C

D1	D2	D3	D6	D7	D8	DB	L1N	L1	L2	L3	L5	L6	L7	L8	L9	B2
10	14	24	17	21	3	18	50	35.5	18	25.5	1.5	4	8.5	17.5	10.0	8.0
12	16	26	19	23	3	21	50	36.5	18	26.5	1.5	4	8.5	17.5	10.0	8.0
14	18	31	21	25	3	23	55	39.5	18	29.5	1.5	4	8.5	17.5	10.0	8.0
16	20	34	23	27	3	26	55	41.0	18	31.0	1.5	4	8.5	17.5	10.0	8.0
18	22	36	27	33	3	28	55	44.0	20	32.5	2.0	5	9.0	19.5	11.5	8.0
20	24	38	29	35	3	30	60	44.0	20	32.5	2.0	5	9.0	19.5	11.5	8.0
22	26	40	31	37	3	31	60	44.0	20	32.5	2.0	5	9.0	19.5	11.5	8.0
24	28	42	33	39	3	35	60	44.0	20	32.5	2.0	5	9.0	19.5	11.5	8.0
25	30	44	34	40	3	37	60	45.0	20	33.5	2.0	5	9.0	19.5	11.5	8.0
28	33	47	37	43	3	40	65	47.0	20	35.5	2.0	5	9.0	19.5	11.5	8.0
30	35	49	39	45	3	43	65	47.0	20	35.5	2.0	5	9.0	19.5	11.5	8.0
32	38	54	42	48	3	45	65	51.0	20	39.5	2.0	5	9.0	19.5	11.5	7.5
33	38	54	42	48	3	45	65	51.0	20	39.5	2.0	5	9.0	19.5	11.5	7.5
35	40	56	44	50	3	49	65	55.0	20	43.5	2.0	5	9.0	19.5	11.5	8.0
38	43	59	49	56	4	52	75	60.0	23	46.0	2.0	5	9.0	22.0	14.0	7.5
40	45	61	51	58	4	55	75	62.0	23	48.0	2.0	6	9.0	22.0	14.0	8.0
43	48	64	54	61	4	58	75	65.0	23	51.0	2.0	6	9.0	22.0	14.0	8.0
45	50	66	56	63	4	61	75	69.0	23	55.0	2.0	6	9.0	22.0	14.0	(8)
48	53	69	59	66	4	64	85	69.0	23	55.0	2.0	6	9.0	22.0	14.0	8.0
50	55	71	62	70	4	66	85	73.0	25	58.0	2.5	6	9.0	23.0	15.0	8.0
53	58	78	65	73	4	69	85	75.0	25	60.0	2.5	6	9.0	23.0	15.0	8.0
55	60	79	67	75	4	71	85	75.0	25	60.0	2.5	6	9.0	23.0	15.0	8.0
58	63	83	70	78	4	74	85	75.0	25	60.0	2.5	6	9.0	23.0	15.0	8.0
60	65	85	72	80	4	77	95	75.5	25	60.0	2.5	6	9.0	23.0	15.0	8.0
63	68	88	75	83	4	80	95	75.0	25	60.0	2.5	6	9.0	23.0	15.0	8.0
65	70	90	77	85	4	83	95	76.0	25	61.0	2.5	6	9.0	23.0	15.0	10.0
70	75	98	83	92	4	88	95	81.0	28	63.0	2.5	7	9.0	26.0	18.0	10.0
75	80	103	88	97	4	93	105	86.0	28	68.0	2.5	7	9.0	26.0	18.0	10.0
80	85	109	95	105	4	98	105	86.0	28	68.0	3.0	7	9.0	26.2	18.2	10.0